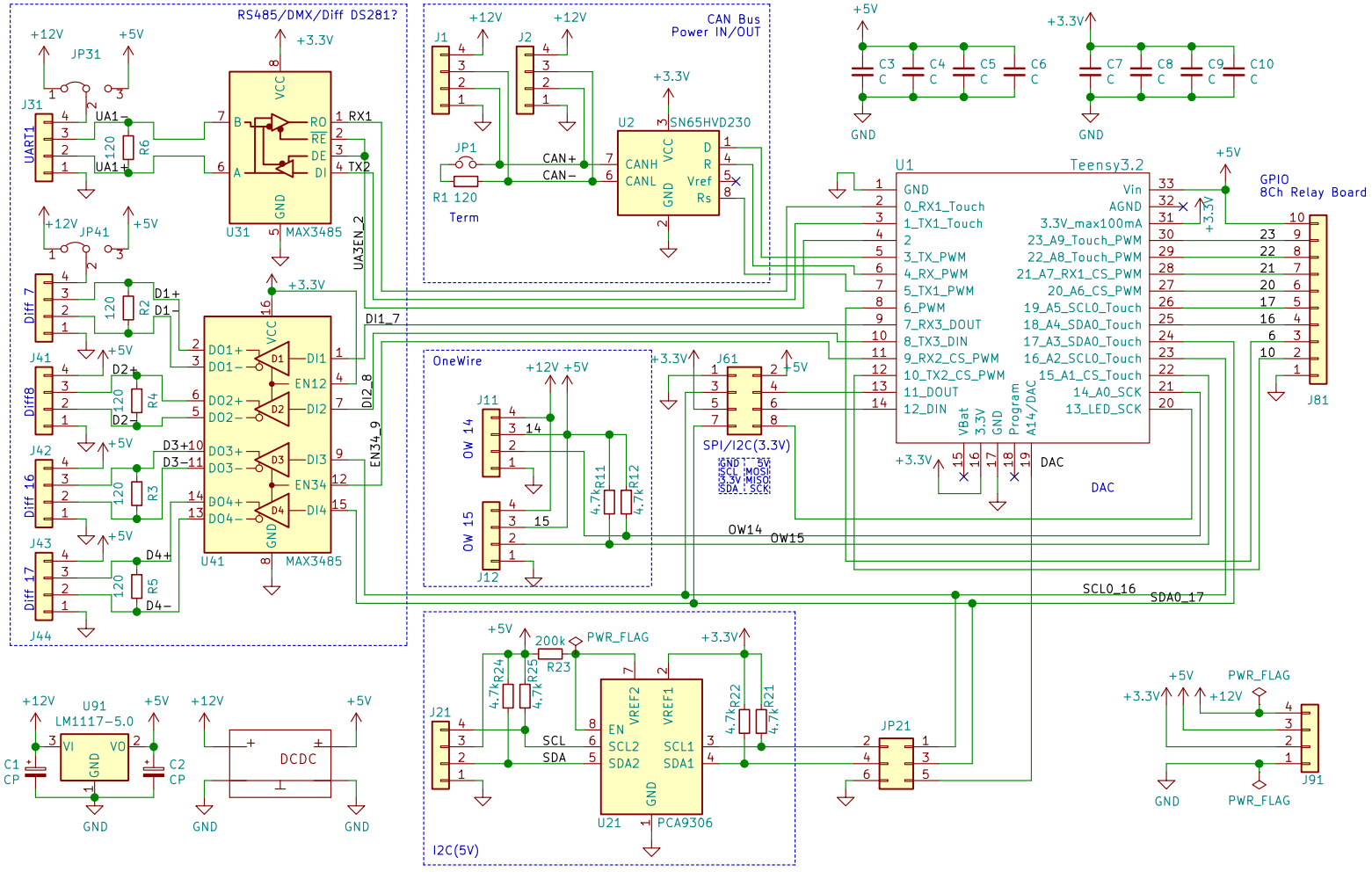
RS485/DMX/Diff DS281?
CAN Bus
Power IN/OUT
OneWire
SPI/I2C(3.3V)
GND 5V
SCL MOSI
3.3V MISO
SDA SCK
I2C(5V)
Teensy3.2
GPIO
8Ch Relay Board
DAC
MAX3485
SN65HVD230
PCA9306
LM1117-5.0
DCDC
Term
PWR_FLAG